Pribusin Inc.

Manufacturers of Process Controls and Instrumentation

Instruction Manual

Model: ***IUC-X9-TXC-N (NEMA 4X)***

Function: ***Telephone Line Transmission System***

Input: ***One Analog and Two 'C' Contacts***

- ☐ X=1: 1-5mA
- ☐ X=2: 4-20mA
- ☐ X=3: 0-1 mA
- ☐ X=4: 10-50mA
- ☐ X=5: 1-5 VDC
- ☐ X=6: 0-10 VDC
- ☐ X=7: _____

Output: ☐ Leased Phone Line (600 ohm)
(to IUC-7X-RXC)

Power:
- ☐ 117 VAC, 50/60 Hz
- ☐ 24 VDC, 160 mA
- ☐ _____

Serial #: _____
(If special or required)

For Technical Assistance And Questions Call
USA: (734) 677-0459 CANADA: (905) 660-5336

Restocking Policy

All product returned to Pribusin Inc. in prime condition (not damaged, scratched or defaced in any way) within seven (7) months from the original date of shipment is subject to a 50% restocking charge. All product must be accompanied by a Return Authorization number (RA number) which must be obtained from Pribusin Inc. prior to returning any product.

After seven (7) months from the original date of shipment, products cannot be returned for restocking.

Custom designed products, modified products or all non-standard products may not be returned for restocking.

Warranty Policy

Pribusin Inc. warrants equipment of its own manufacture to be free from defects in material and workmanship, under normal conditions of use and service, and will replace any component found to be defective, on its return to Pribusin Inc., transportation charges prepaid, within one year of its original purchase. Pribusin Inc. will extend the same warranty protection on equipment, peripherals and accessories which is extended to Pribusin Inc. by the original manufacturer. Pribusin Inc. also assumes noliability, expressed or implied, beyond its obligation to prelace any component involved. Such warranty is in lieu of all other warranties, expressed or implied.

Pribusin Inc.

Manufacturers of Process Controls and Instrumentation

Models: IUC-X9-TXC & IUC-7X-RXC

Telephone Line Transmission System

(Formerly: IUC-29-LIN-FRC & IUC-72-UNV-FRC)

NRTL/C

Standard Features:

High Input-Output-Power Isolation (1500VAC Test)

Industry Standard Inputs: 4-20 mA, 1-5 VDC, and more (see below)

Industry Standard Output: 4-20 mA, 1-5 VDC, more (see below)

Send One Analog and Two Contacts over Class C Telephone Line

Easy Field Calibration

Microprocessor Controlled for High Accuracy

Two Wire Supply Option for Two Wire Transmitters

Power: 117 VAC 50/60 Hz (Optional 24 VDC)

High Noise Rejection

CSA and NRTL Approved (LR 51078)

Function:

The IUC-X9-TXC is a telephone line transmitter which takes in one analog signal and two dry contacts. It has a 600 Ohm impedance matched output which can connect directly into a class C telephone line. All three signals are sent simultaneously to the IUC-7X-RXC telephone line receiver where they are split up into their original forms. The IUC-7X-RXC also has an impedance matched input to allow direct connection to the phone line. A built in line monitor detects line failures and sets the output to 4 mA.

Model Designation:

IUC-X9-TXC — Input	IUC-7X-RXC — Output
1: 1-5 mA (Zin=1K Ohm)	1: 1-5 mA (4000 Ohm Drive)
2: 4-20 mA(Zin=250 Ohm)	2: 4-20 mA (1000 Ohm Drive)
3: 0-1mA (Zin=5K Ohm)	3: 0-1 mA (20000 Ohm Drive)
4: 10-50 mA (Zin=100 Ohm)	4: 10-50 mA (250 Ohm Drive)
5: 1-5 VDC (Zin=1Meg Ohm)	5: 1-5 VDC (Zout=250 Ohm)
6: 0-10 VDC (Zin=1Meg Ohm)	6: 0-10 VDC (Zout=500 Ohm)
7: Special Input	7: Special Output

Example: A Transmitter/Receiver pair for 4-20 mA input and output with 2 dry contacts in a standard metal enclosure is designated by IUC-29-TXC and IUC-72-RXC.

If no options specified, unit is 117 VAC Power in metal enclosure

Specifications:

Isolation: Input to Output to Power 1500 VAC (Test)
Accuracy/Linearity:+/- 0.3% max., +/- 0.1% typ.
Operating Temperature: -40 Deg.C. to + 50 Deg.C.
Temperature Effects:+/- 0.5% max., +/-0.2% typ.
(for 40 Deg. change)

Options: (Add letters to end of Model Number)

A - 24 VDC Prime Power
B - 240 VAC Prime Power (not CSA approved)
C - Conduit Cover for Metal Enclosure (see back)
N - NEMA 4X enclosure (see back)

IUC-X9-TXC & IUC-7X-RXC

Enclosures & Dimensions:

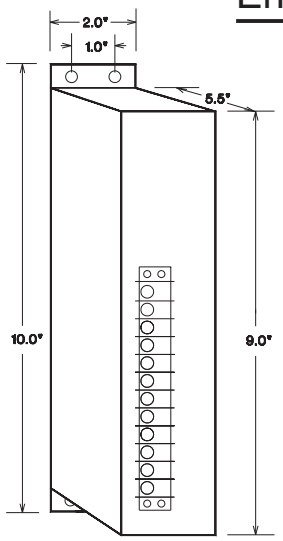

Standard Metal Enclosure

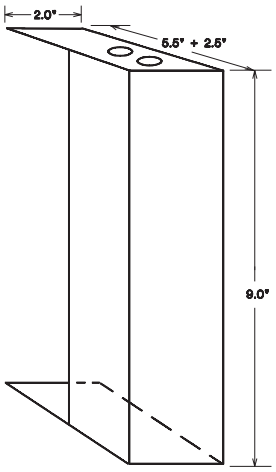

Conduit Cover Option
for Metal Enclosure

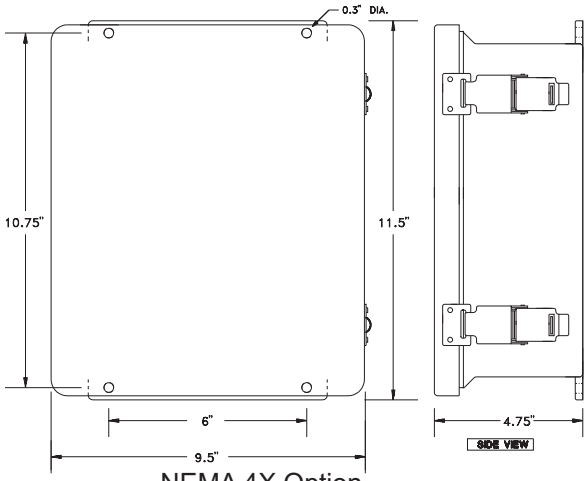

NEMA 4X Option

Connection:

Shown here for
4-20mA Input
and Output

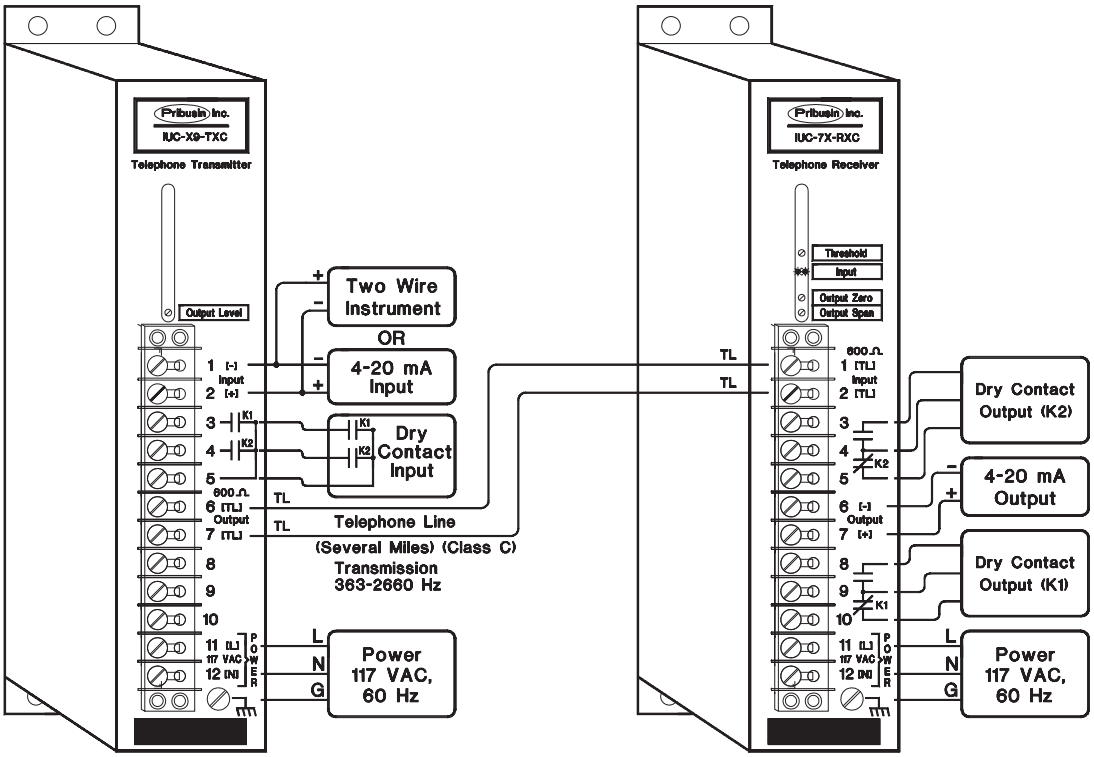

Manufactured By:

Pribusin Inc.

www.pribusin.com
info@pribusin.com

USA:

Pribusin Inc.
743 Marquette Ave.
Muskegon, MI 49442
Ph: (231) 788-2900
Fx: (231) 788-2929

CANADA:

Pribusin Inc.
101 Freshway Dr. Unit 57
Concord, Ontario, L4K 1R9
Ph: (905) 660-5336
Fx: (905) 660-4068

Rev.A Subject to change without notice

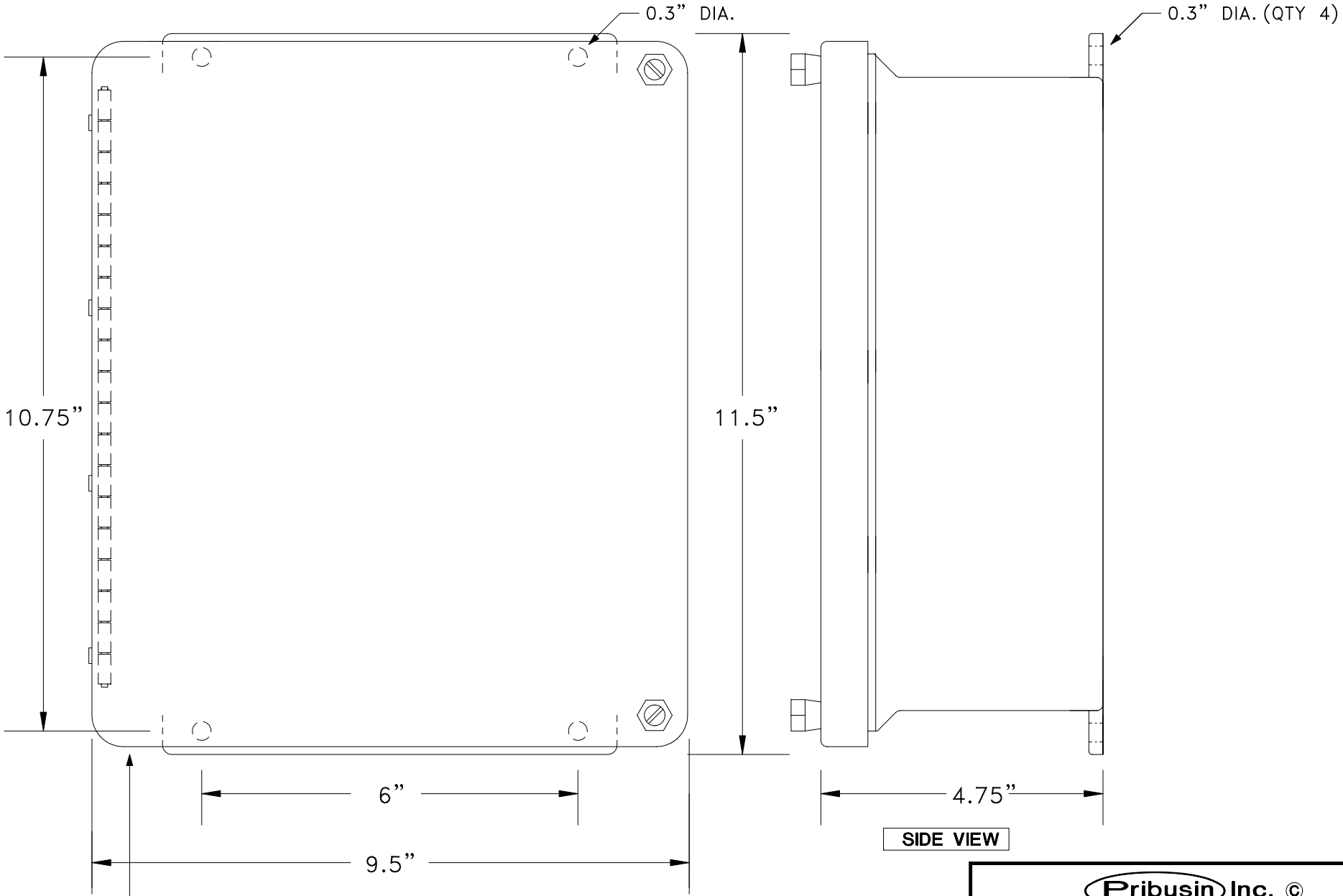

FIBERGLASS ENCLOSURE
WITH STAINLESS STEEL HINGE
AND SCREW COVER

Pribusin Inc. ©		
CHKD:	DATE: AUG. 09/95	DRN: KS
NEMA 4X FIBERGLASS ENCLOSURE INSIDE SIZE: 10" x 8" x 4"		
DWG. NO.: 104499-3		REV. B

Output Calibration:

1. Put in Jumper 6(H1). See Detail A.
2. This causes output to be Zero Scale Analog.
3. Move Jumper to 7(H1).
4. This causes output to be Full Scale Analog.
5. Remove Jumper from H1.
6. Adjust OUTPUT LEVEL for desired output.

   (This is factory set at 0 db, and normally requires NO adjustment.)

For Two Wire Hookup Jumper on H2 should be on 24V position

NOTE reverse polarity on two wire hookup. See Detail B.

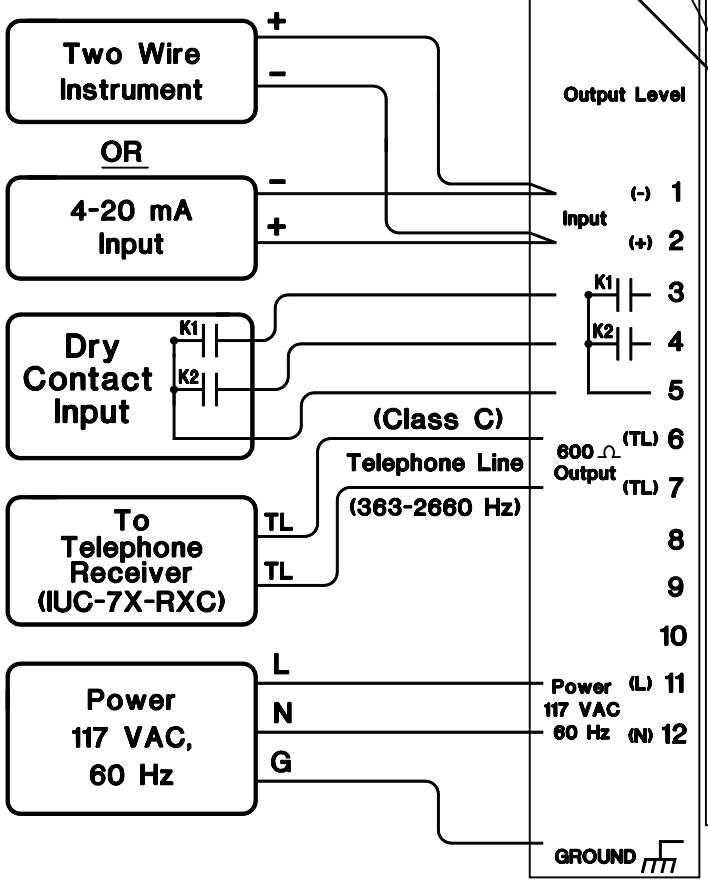

Detail A

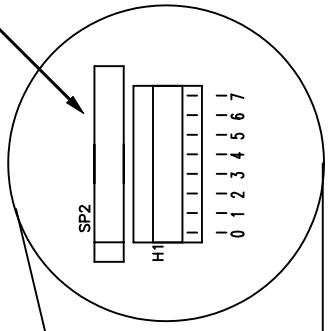

Detail B

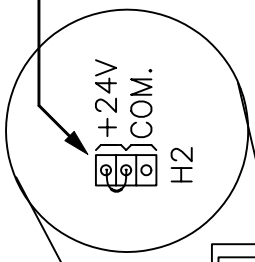

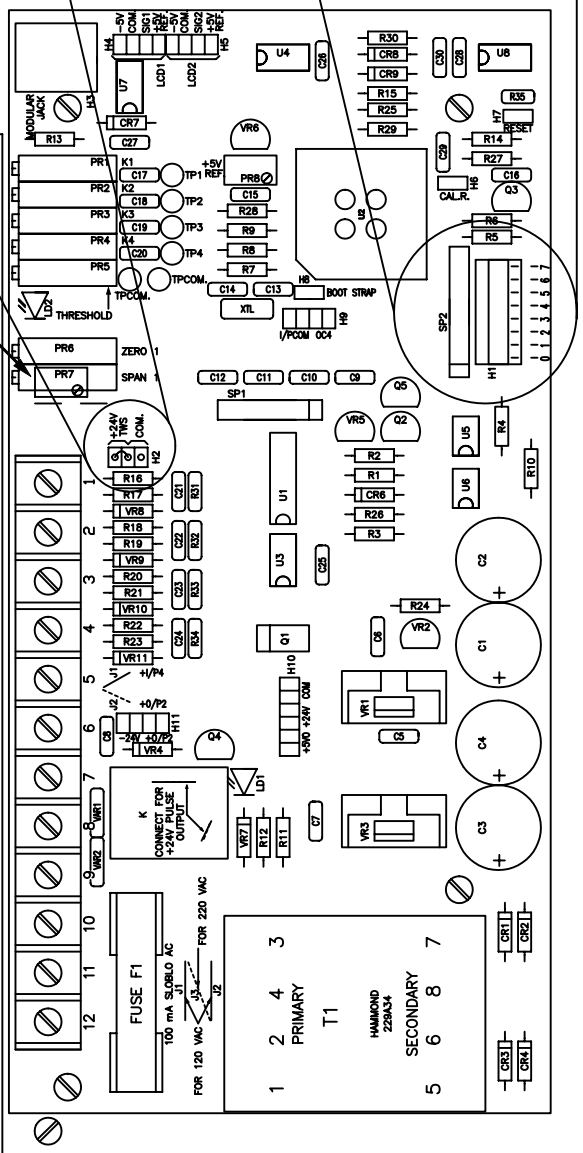

Pribusin Inc. ©

CHKD:	DATE: AUG. 24/94	DRN: KS

Model: IUC-X9-TXC-N (NEMA 4X)
Telephone Transmitter (363-2660 Hz)
Connection / Calibration

DWG. NO.: 105035	REV. A

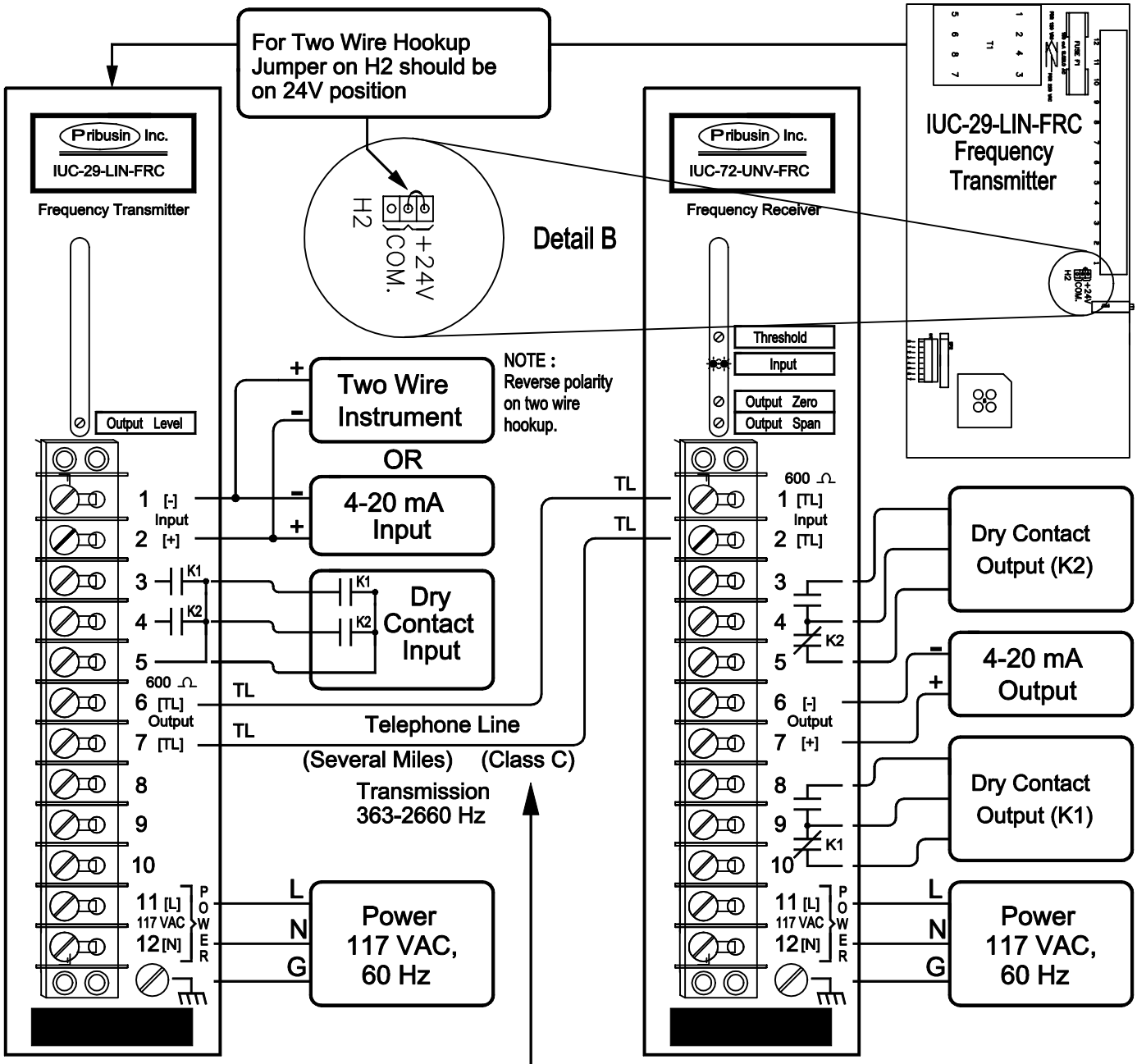

Class C signal and control channel transmission characteristics

Type of Service :	Signal and control circuits by voice frequency tones/voice circuit alternate use of channel
Maximum information rate :	600 bauds
Mode of operation :	2 point or multipoint Half or full duplex (2 point only full duplex)
Method of termination :	2 wire or 4 wire
Impedance–source & load :	600 ohms, balanced & resistive
Impedance of channel :	Nominal 600 ohms
Maximum signal power :	–8 dbm composite tones (0 TLP)
Maximum voice level :	–8 Vu. (0 TLP) *Note: 0 TLP is zero level transmission reference point, generally sending station.*
Loss 1000 Hz :	20 db maximum (L)
Frequency Response 350–2750 Hz :	–3 to +6 db referred to (L)
Outside this band :	Not specified–no DC transmission
Circuit background noise :	30 db signal–to–noise ratio minimum

Note :

Channel failure causes output to go to 4 mA and relays K1 and K2 to de-energize.

Pribusin Inc. ©

CHKD:	DATE: FEB. 15/93	DRN: KS

Frequency (363-2660 Hz) Telephone System for 4-20 mA Transmission and Two Contacts Connection Diagram

DWG. NO. : 104255	REV. A