Pribusin Inc.

Manufacturers of Process Controls and Instrumentation

Instruction Manual

Model: *NTC-7X-FRT*

Function: *Non-Isolated Frequency Converter & Trip*

Input: *Frequency (Adj. 5 Hz to 10 Khz)*

Output:
- ☐ X=1: 1-5mA
- ☐ X=2: 4-20mA
- ☐ X=3: 0-1 mA
- ☐ X=7: _____
- ☐ X=4: 10-50mA
- ☐ X=5: 1-5 VDC
- ☐ X=6: 0-10 VDC

Power: ☐ 24 VDC, 80 mA

Serial #: _____
(If special or required)

For Technical Assistance And Questions Call
USA: (231) 788-2900 CANADA: (905) 660-5336

Restocking Policy

All product returned to Pribusin Inc. in prime condition (not damaged, scratched or defaced in any way) within seven (7) months from the original date of shipment is subject to a 50% restocking charge. All product must be accompanied by a Return Authorization number (RA number) which must be obtained from Pribusin Inc. prior to returning any product.

After seven (7) months from the original date of shipment, products cannot be returned for restocking.

Custom designed products, modified products or all non-standard products may not be returned for restocking.

Warranty Policy

Pribusin Inc. warrants equipment of its own manufacture to be free from defects in material and workmanship, under normal conditions of use and service, and will replace any component found to be defective, on its return to Pribusin Inc., transportation charges prepaid, within one year of its original purchase. Pribusin Inc. will extend the same warranty protection on equipment, peripherals and accessories which is extended to Pribusin Inc. by the original manufacturer. Pribusin Inc. also assumes noliability, expressed or implied, beyond its obligation to prelace any component involved. Such warranty is in lieu of all other warranties, expressed or implied.

Pribusin Inc.

Manufacturers of Process Controls and Instrumentation

Model: NTC-7X-FRT

Non-Isolated Frequency Converter & Trip

NRTL/C

Standard Features:

DIN-Rail Mount (small size)

Wide Input Frequency Ranges (from 5 Hz to 10 KHz)

Industry Standard Output: 4-20 mA, 1-5 VDC, more (see back)

Trip Function has Setpoint, Deadband and Delay Adjustment

Easy Field Calibration (Typ. calibration time < 2 min. using handheld meter only)

Microprocessor Controlled for High Accuracy

24 VDC Supply for Open Collector Input or Dry Contact Input

Power: 24 VDC

High Noise Rejection

CSA and NRTL Approved

Function:

The NTC-7X-FRT is a microprocessor controlled Frequency to analog output converter that is easily field configurable to any frequency input from 0-10 Hz to 0-10 KHz. It has a single form "C" contact that has individual setpoint, deadband and delay adjustments. In addition, there is an analog output that converts the input frequency to any one of several standard outputs.

The Setpoint and Deadband are adjustable from 0-100 % of the calibrated input frequency. The deadband is an absolute type deadband, meaning that it is always linked to the setpoint. Once it is set to a certain value, it need not be adjusted again if the setpoint is re-adjusted. The delay function adds an optional delay on the relay trip function of 0-60 sec. This is helpful in eliminating false alarms.

Calibration:

The NTC-7X-FRT has 11 input frequency ranges which offer full adjustability from their minimum to their maximum frequency via a multi turn potentiometer. The setpoint, deadband and delay each have their own potentiometer. All potentiometers have a test point where a voltage of 0-5 VDC indicates a setting of 0-100%. This allows for easy field calibration with the instrument running.

Specifications:

Accuracy/Linearity: +/-0.3% max., +/-0.1% typ.
Operating Temperature: -40 Deg.C. to +50 Deg.C.
Temperature Effects: +/-0.5% max., 0.2% typ.
(for 40 Deg.C. change)
Contact Rating: 0.4A @ 125VAC
2A @ 30VDC

NTC-XX-FRT

Dimensions:

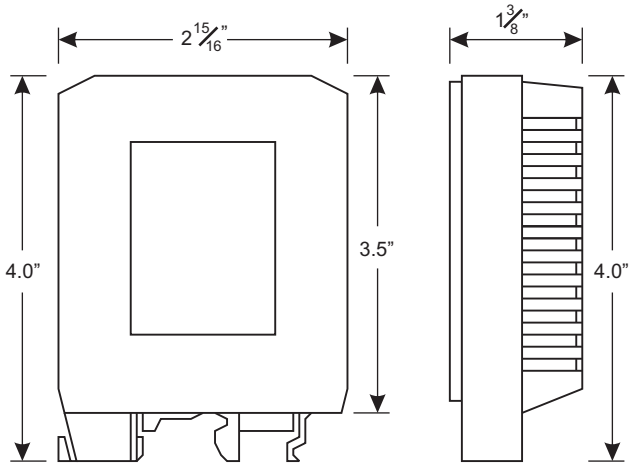

Calibration:

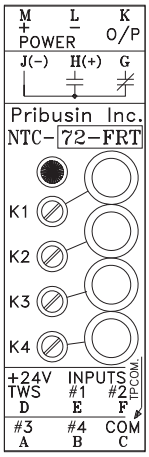

Calibration is made easy by multi turn potentiometers with test jacks for meter connection.

Connection:

Shown here for 4-20mA Output

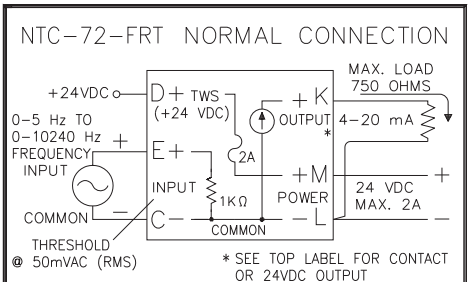

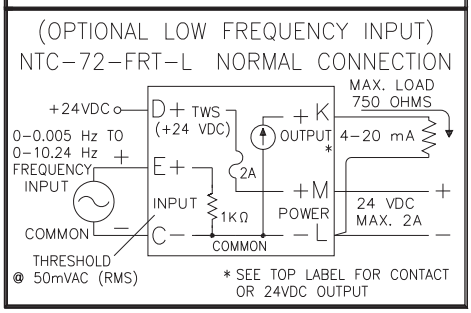

Model Designation:

NTC-7X-FRT

Output

1: 1-5 mA (3000 Ohm Drive)
2: 4-20 mA(750 Ohm Drive)
3: 0-1mA (15000 Ohm Drive)
4: 10-50 mA (250 Ohm Drive)
5: 1-5 VDC (Zout=250 Ohm)
6: 0-10 VDC (Zout=500 Ohm)
7: Special Output

Example: A Frequency Converter with a 1-5 VDC output with 24 VDC power is designated by: NTC-75-FRT

Options: (Add letters to end of Model Number)

R - RS485 Serial Output
L - Low Frequency Input (0.005 Hz to 10 Hz)

Manufactured By:

Pribusin Inc.

www.pribusin.com
info@pribusin.com

USA:
Pribusin Inc.
743 Marquette Ave.
Muskegon, MI 49442
Ph: (231) 788-2900
Fx: (231) 788-2929

CANADA:
Pribusin Inc.
101 Freshway Dr. Unit 57
Concord, Ontario, L4K 1R9
Ph: (905) 660-5336
Fx: (905) 660-4068

Rev.A Subject to change without notice

NTC-76-FRT NORMAL CONNECTION

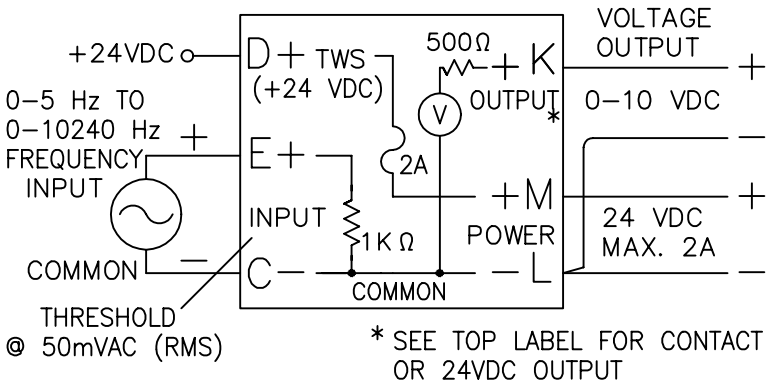

(OPTIONAL LOW FREQUENCY INPUT) NTC-76-FRT-L NORMAL CONNECTION

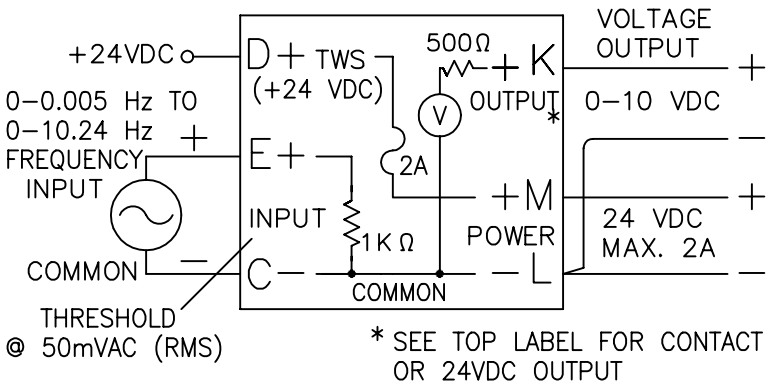

(+), (−) refer to 24VDC Output (option)

Contact Rating:
0.4A @ 125VAC
2A @ 30VDC

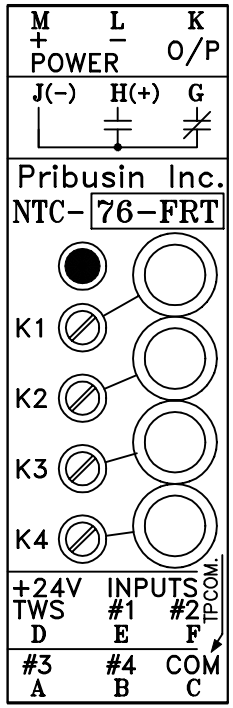

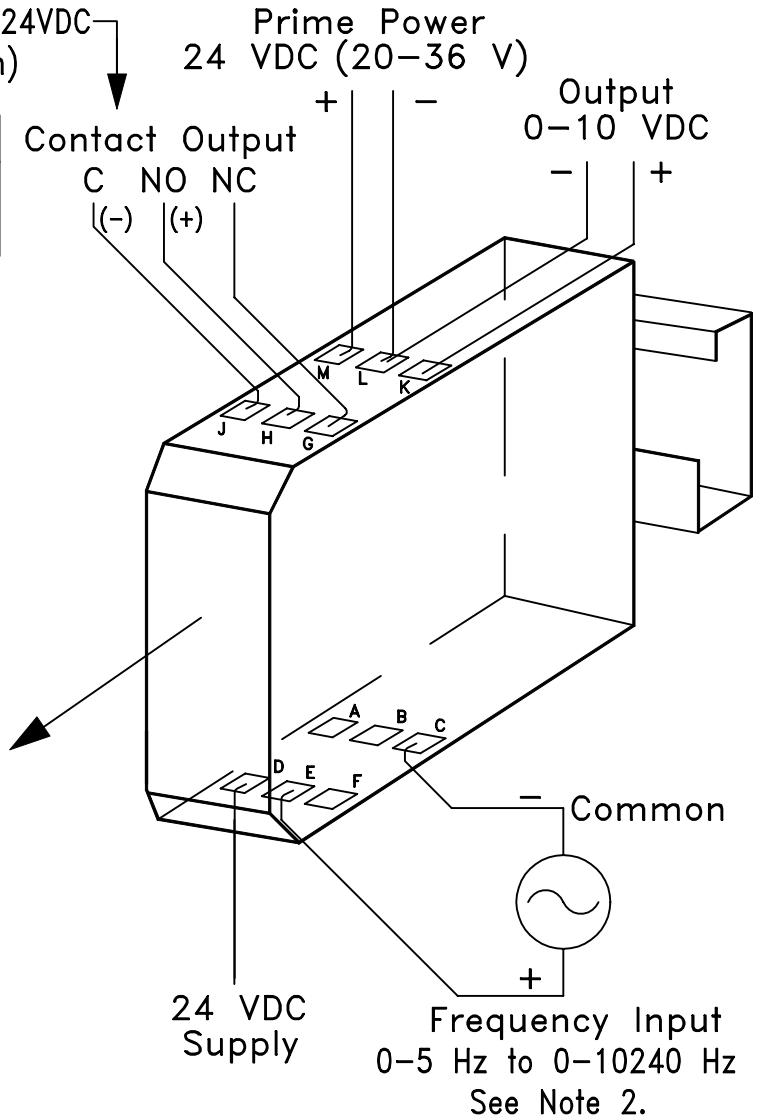

Notes:

1. For Details of Terminal Block Enclosure/Din Rail See Dwg. 104385.
2. An optional low frequency input version (NTC-7X-FRT-L) is available for frequency inputs of 0-0.005 Hz to 0-10.24 Hz.

Pribusin Inc. ©

CHKD :	DATE : JUNE 24/97	DRN: KS

Model: NTC-76-FRT
Frequency Converter & Trip
Connection Diagram

DWG. NO. : 105843	REV. A

Output Calibration :

Note : This unit is factory calibrated, and normally requires NO adjustments.

1. Put in Jumper 6(H1). See Detail A.
2. Adjust OUTPUT ZERO until output signal is 0 VDC.
3. Move Jumper to 7(H1).
4. Adjust OUTPUT SPAN until output signal is 10 VDC.
5. Repeat procedure starting at 1. until output signal is correct.
6. Remove Jumper from 7(H1).

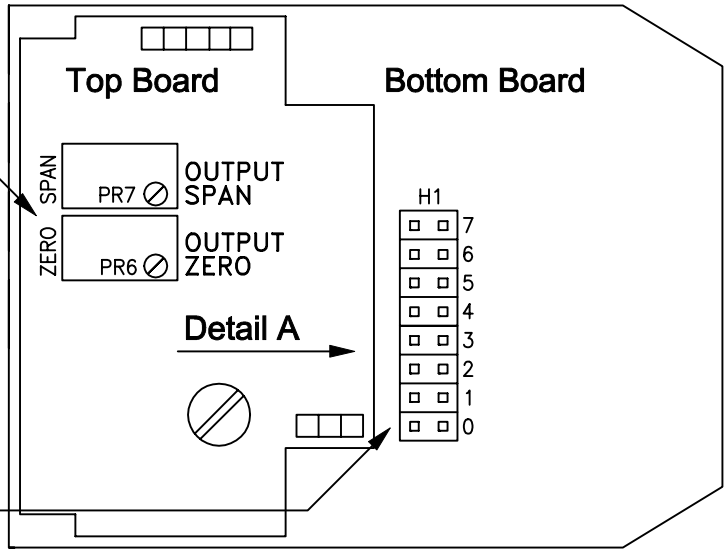

Maximum Frequency Range	JUMPER (H1)			
	3	2	1	0
0-10 Hz	OUT	OUT	OUT	OUT
10-20 Hz	OUT	OUT	OUT	IN
20-40 Hz	OUT	OUT	IN	OUT
40-80 Hz	OUT	OUT	IN	IN
80-160 Hz	OUT	IN	OUT	OUT
160-320 Hz	OUT	IN	OUT	IN
320-640 Hz	OUT	IN	IN	OUT
640-1280 Hz	OUT	IN	IN	IN
1280-2560 Hz	IN	OUT	OUT	OUT
2560-5120 Hz	IN	OUT	OUT	IN
5120-10240 Hz	IN	OUT	IN	OUT

Table A

⇨ Note : See Dwg. 105844-2 for Calibration of Alarm Trip.

Potentiometer	Function
K1	Input Span
K2	Alarm Setpoint
K3	Alarm Deadband
K4	Alarm Delay

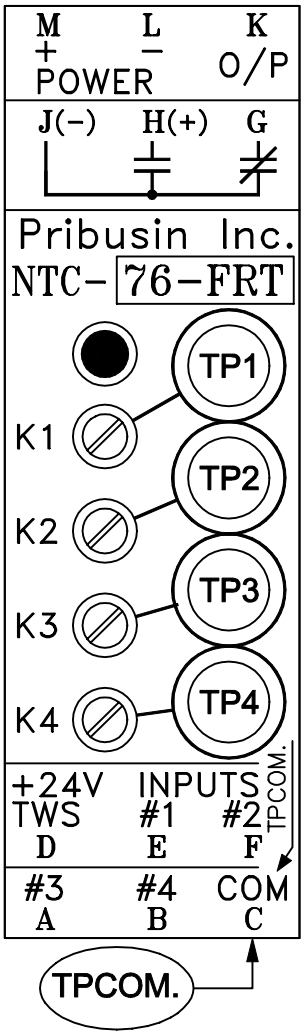

Input Frequency Calibration :

Full Range Capacity : 0-5 Hz to 0-10240 Hz (Selectable)

The following steps must be performed when a change in the input frequency range is required.

Setting a new input frequency range involves two operations.

1) Selecting the maximum frequency range by jumpers on header H1.

2) Adjusting the K1 (Input Span) potentiometer to the exact frequency within the selected range.

1) Selecting the Maximum Frequency Range :

Choose a jumper setting from Table A such that the maximum input frequency is in the selected range.

For example : for a frequency of 0-1000 Hz choose maximum frequency range setting 640-1280 Hz.

2) Maximum Frequency Adjustment :

The K1 (Input Span) potentiometer is used to set up the exact maximum input frequency after a range has been selected.

TP1 indicates the setting of the potentiometer as a voltage of 0-5 VDC with respect to TPCOM..

To calculate that voltage use the following formula :

$$TP1 = 5 \times \left[\frac{\text{Max. Range Freq.}}{\text{Max. Input Freq.}} - 1 \right] \text{VDC}$$

∗ Example for Input Frequency of 0-1000 Hz :

1. Select the Max. Freq. Range (640-1280 Hz) from Table A.
2. Find TP1 setting for 1000 Hz

$$TP1 = 5 \times \left[\frac{1280}{1000} - 1 \right] \text{VDC} = 5 \times \left[1.28 - 1 \right] \text{VDC} = 1.40 \text{ VDC}$$

3. Set TP1 Pot. to 1.400 VDC (Input Calibration is Complete.)

Pribusin Inc. ©

CHKD:	DATE: JUNE 24/97	DRN: KS

Model: NTC-76-FRT
Frequency Converter & Trip
Calibration Procedure

DWG. NO. : 105844-1 Sht. 1 of 2	REV. A

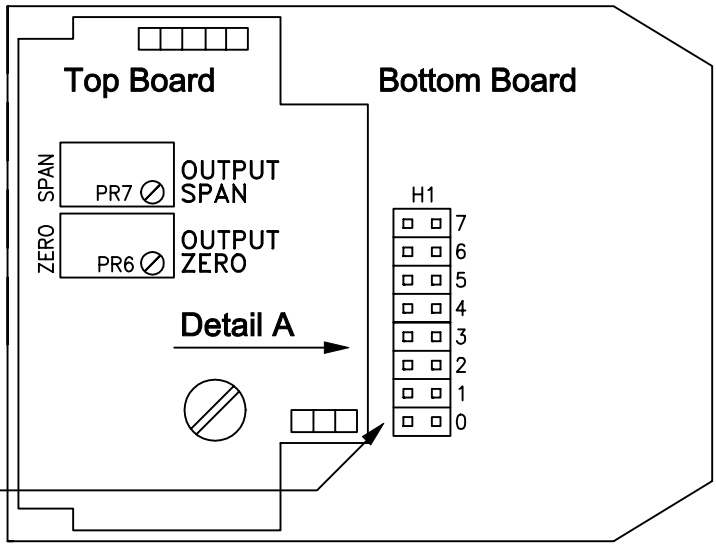

Relay Operation Mode :

Jumper	Out	In
4(H1)	High Trip	Low Trip
5(H1)	Norm. Eng.	Norm. De-Eng.

⇨ Note : See Dwg. 105844-1 for Input Frequency Calibration

Potentiometer	Function
K1	Input Span
K2	Alarm Setpoint
K3	Alarm Deadband
K4	Alarm Delay

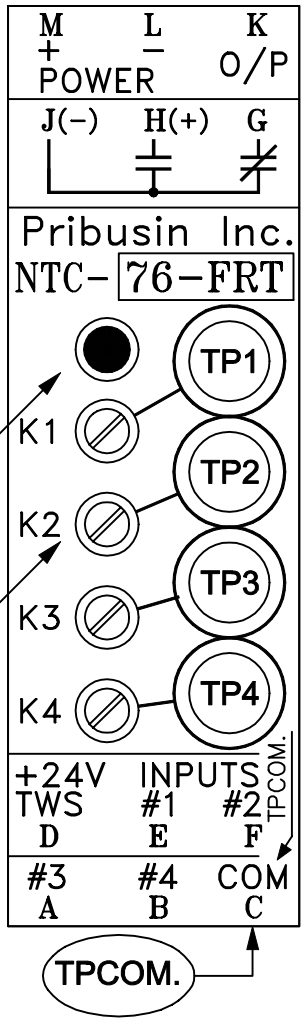

LED Indication of Alarm Status :

- when the Trip is in Alarm Mode, the LED will be solid ON.
- when the Trip is in Delay Mode, the LED will be flashing.

Calibration of Alarm Trip

Setpoint Calibration :

1. Connect Voltmeter to TP2 and TPCOM..
2. Set K2 (Setpoint) to value required.
   0 to 5 VDC represents 0 to 100 %.

Deadband Calibration :

1. Connect Voltmeter to TP3 and TPCOM..
2. Set K3 (Deadband) to value required.
   0 to 5 VDC represents 0 to 100 %.

Delay Calibration :

1. Connect Voltmeter to TP4 and TPCOM..
2. Set K4 (Delay) to value required.
   0 to 5 VDC represents 0 to 60 sec.

Pribusin Inc. ©

CHKD:	DATE: JUNE 24/97	DRN: KS

Model: NTC-76-FRT
Frequency Converter & Trip
Calibration Procedure

DWG. NO. : 105844-2	Sht. 2 of 2	REV. A

Enclosure Detail :

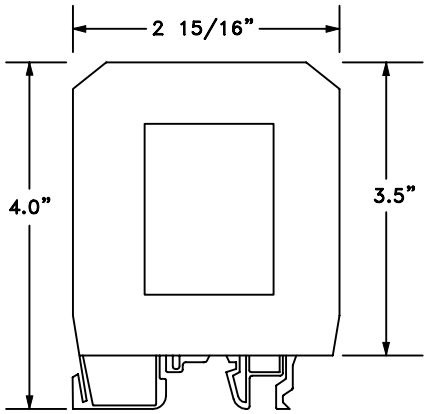

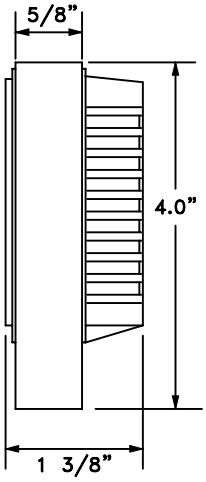

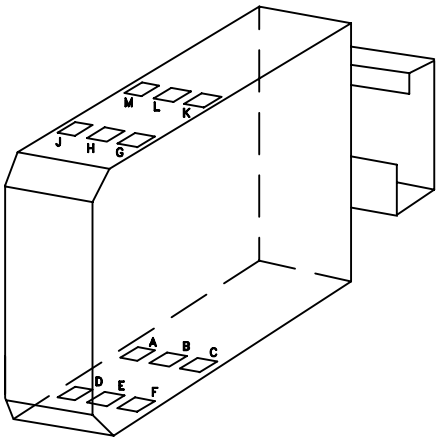

Din Rail Detail :

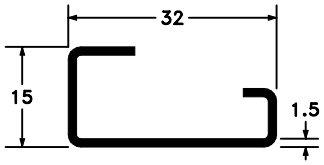	A	Rail Standard EN 50 035 Dimensions: 32 x 15 x 1.5 mm
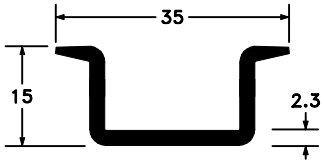	B	Rail Standard DIN EN 50 022 Dimensions: 35 x 15 x 2.3 mm
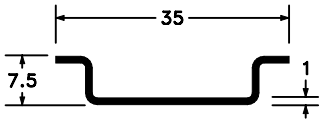	C	Rail Standard DIN EN 50 022 Dimensions: 35 x 7.5 x 1 mm
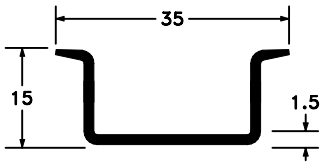	D	Rail Standard DIN EN 50 022 Dimensions: 35 x 15 x 1.5 mm

Pribusin Inc. ©		
CHKD:	DATE: APR. 26/93	DRN: KS
(Wide Cover) Terminal Block Enclosure/ Din Rail Detail		
DWG. NO.: 104385		REV. B