Pribusin Inc.

Manufacturers of Process Controls and Instrumentation

Instruction Manual

Model: *UA-XD*

Function: *Dual Alarm Trip*

Input:
- ☐ X=1: 1-5 mA
- ☐ X=2: 4-20 mA
- ☐ X=3: 0-1 mA
- ☐ X=4: 10-50 mA
- ☐ X=5: 1-5 VDC
- ☐ X=6: 0-10 VDC
- ☐ X=7: _____

Output: ☐ Form "C" Dry Contacts

Power:
- ☐ 117 VAC, 60 Hz, 6 VA
- ☐ 24 VDC, 160 mA
- ☐ _____

Serial #: _____

(If special or required)

For Technical Assistance And Questions Call
USA: (231) 788-2900 CANADA: (905) 660-5336

Restocking Policy

All product returned to Pribusin Inc. in prime condition (not damaged, scratched or defaced in any way) within seven (7) months from the original date of shipment is subject to a 50% restocking charge. All product must be accompanied by a Return Authorization number (RA number) which must be obtained from Pribusin Inc. prior to returning any product.

After seven (7) months from the original date of shipment, products cannot be returned for restocking.

Custom designed products, modified products or all non-standard products may not be returned for restocking.

Warranty Policy

Pribusin Inc. warrants equipment of its own manufacture to be free from defects in material and workmanship, under normal conditions of use and service, and will replace any component found to be defective, on its return to Pribusin Inc., transportation charges prepaid, within one year of its original purchase. Pribusin Inc. will extend the same warranty protection on equipment, peripherals and accessories which is extended to Pribusin Inc. by the original manufacturer. Pribusin Inc. also assumes noliability, expressed or implied, beyond its obligation to prelace any component involved. Such warranty is in lieu of all other warranties, expressed or implied.

Pribusin Inc.

Manufacturers of Process Controls and Instrumentation

Model: UA-XD

Dual Alarm Trip

NRTL/C

Standard Features:

User Configurable for Single or Dual Input Operation

Industry Standard Inputs: 4-20 mA, 1-5 VDC, and more (see back)

Various Input Options Available (Current, Frequency, T/C, RTD, ACV, ACI, others)

2 Form 'C' Relay Contact Outputs

Each Relay Contact has Individual Setpoint, Deadband and Delay Adjustment.

Easy Field Calibration (Typ. calibration time < 2 min. using handheld meter only)

Microprocessor Controlled for High Accuracy

Two Wire Supply Option for Two Wire Transmitters

Power: 117 VAC 50/60 Hz (Optional 24 VDC)

High Noise Rejection

CSA and NRTL Approved (LR 51078)

Function:

The UA-XD is a microprocessor controlled single or dual trip. It is easily field configurable to operate in a large number of different modes. Each relay contact output is individually configurable to the following modes of operation: High/Low Trip , Normally Energized / De-energized. Additionally, both relays can be made to operate from the same input to give two levels of alarm for a single input.

A delay feature allows a 0-60 sec. adjustable ON delay to be added to the trip function in order to screen out intermittent and erroneous alarms. If the delay function is activated, the input must be greater than the setpoint for the time specified by the delay before the relay will activate. There is also a combined ON and OFF delay function which, in addition to delaying the relay 'turn-on' time, delays the relay'turn-off' time.

Calibration:

Each relay contact has three potentiometers that are used to adjust the setpoint, deadband and delay settings. The setpoint and deadband can be set anywhere from 0-100% of the input range. The delay is adjustable from 0-60 sec. A test point next to each potentiometer shows a voltage of 0-5 VDC for a setting of 0-100%.

Specifications:

Accuracy/Linearity:+/- 0.3% max., +/- 0.1% typ.
Operating Temperature: -40 Deg.C. to +50 Deg.C.
Temperature Effects: +/-0.5% max., +/-0.2% typ.
(for 40 Deg.C. change)
Contact Rating: 10A 1/8Hp @ 125VAC
6A 1/8Hp @ 277VAC

UA-XD

Enclosures & Dimensions:

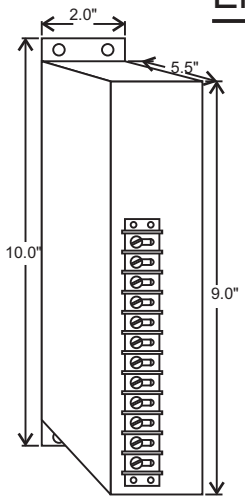

Standard Metal Enclosure

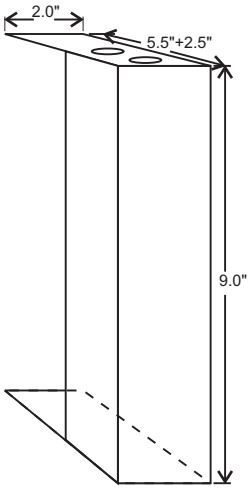

Conduit Cover Option
for Metal Enclosure

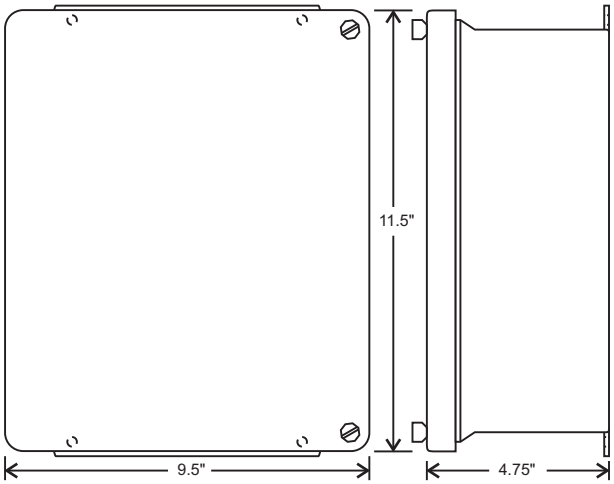

NEMA 4X Option

Connection:

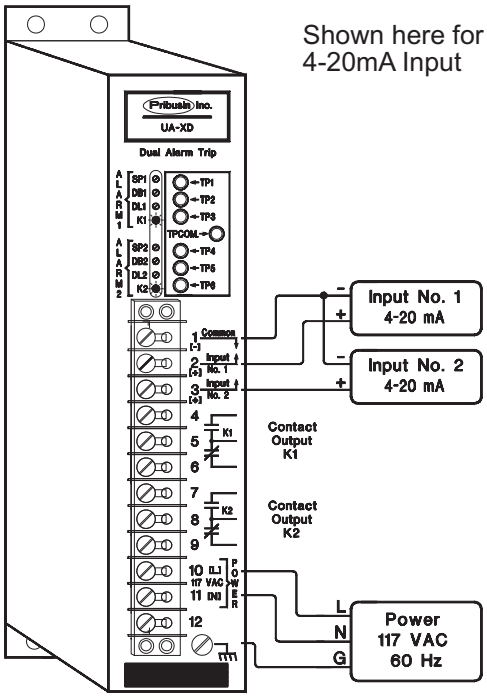

Model Designation:

UA- XD

Input

1: 1-5 mA (Zin=1K Ohm)
2: 4-20 mA(Zin=250 Ohm)
3: 0-1mA (Zin=5K Ohm)
4: 10-50 mA (Zin=100 Ohm)
5: 1-5 VDC (Zin=1Meg Ohm)
6: 0-10 VDC (Zin=1Meg Ohm)
7: Special Input

Other Models

-TXX:Thermocouple
(see UA-XD-TXX)
-TXX-DIF: Differential T/C
(see UA-XD-TXX-DIFF
-RTX:RTD Input
(see UA-XD-RTX)
-FRX:Frequency
(see UA-XD-FRX)

Example: Dual Alarm Trip with 4-20 mA Input in standard metal enclosure and 24VDC Power is designated by:UA-2D-A

If no options specified, unit is 117 VAC Power in metal enclosure

Options: (Add letters to end of Model Number)

A - 24 VDC Prime Power
B - 240 VAC Prime Power (not CSA approved)
T - 200 mA Two Wire Supply (24 VDC unreg.)
C - Conduit Cover for Metal Enclosure (see above)
N - NEMA 4X enclosure (see above)

Manufactured By:

Pribusin Inc.

www.pribusin.com
info@pribusin.com

USA:
Pribusin Inc.
743 Marquette Ave.
Muskegon, MI 49442
Ph: (231) 788-2900
Fx: (231) 788-2929

CANADA:
Pribusin Inc.
101 Freshway Dr. Unit 57
Concord, Ontario, L4K 1R9
Ph: (905) 660-5336
Fx: (905) 660-4068

Rev.A Subject to change without notice

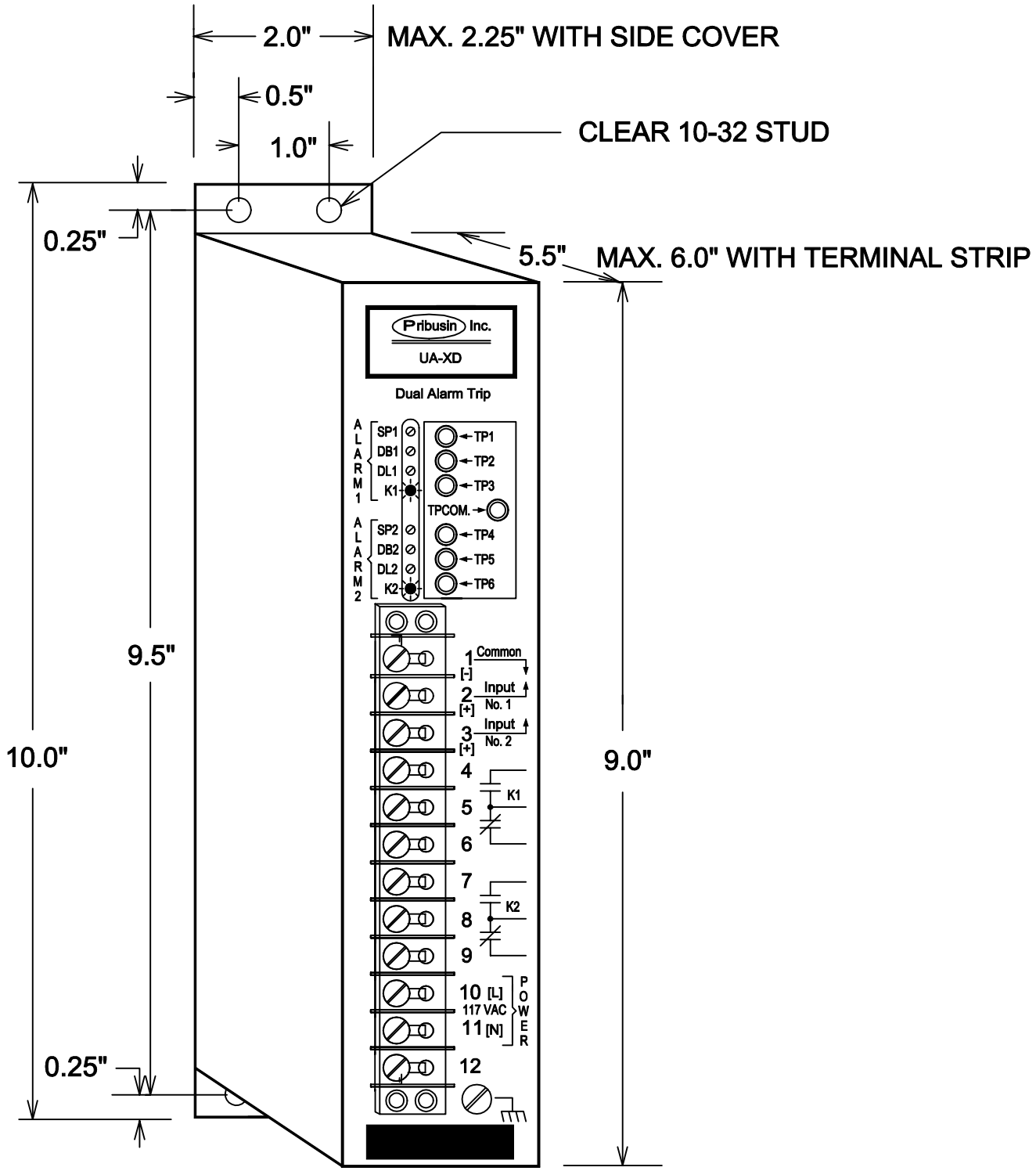

Pribusin Inc. ©		
CHKD:	DATE: MAR. 31/92	DRN: KS
Model: UA-XD Dual Alarm Trip Enclosure Drawing		
DWG. NO. : 103797		REV. B

LED Flash Mode :

Relay action delayed by Delay selected with DL1 and DL2.

If 'ON' and 'OFF' Delay selected (H1-6=IN), LED flashes during 'ON' and 'OFF' Delay.

If 'ON' Delay Only selected (H1-6 =OUT), LED flashes during 'ON' Delay.

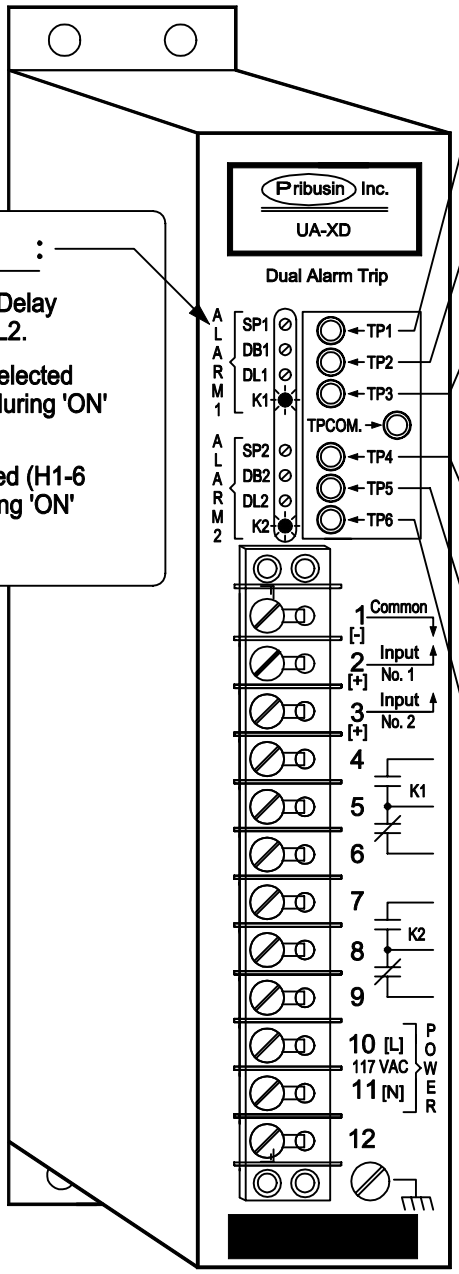

Place meter on TP 1 to TPCOM..
Set Setpoint to value required.
0 to 5 VDC represents 0 to 100%.

Place meter on TP 2 to TPCOM..
Set Deadband to value required.
0 to 5 VDC represents 0 to 100%.

Place meter on TP 3 to TPCOM..
Set Delay to value required.
0 to 5 VDC represents 0 to 60 sec..

Calibration of Relay K1

Place meter on TP 4 to TPCOM..
Set Setpoint to value required.
0 to 5 VDC represents 0 to 100%.

Place meter on TP 5 to TPCOM..
Set Deadband to value required.
0 to 5 VDC represents 0 to 100%.

Place meter on TP 6 to TPCOM..
Set Delay to value required.
0 to 5 VDC represents 0 to 60 sec..

Calibration of Relay K2

See Detail A on Sht. 2 for Jumper Location

Jumper	Out	In
H1-0	Dual Input	Single Input
H1-1	K1 High Trip	K1 Low Trip
H1-2	K2 High Trip	K2 Low Trip
H1-3	K1 Norm. Eng.	K1 Norm. De-Eng.
H1-4	K2 Norm Eng.	K2 Norm. De-Eng
H1-5	No TWI Aux.	TWI Aux.
H1-6	ON Delay Only	OFF and ON Delay
H1-7	4-20 mA Input	0-20 mA Input

For Connection Details and Jumper Settings See Dwg. 103798-2.

Pribusin Inc. ©

CHKD:	DATE: MAR. 31/92	DRN: KS

Model: UA-XD
Dual Alarm Trip
Calibration/Connection

DWG. NO.: 103798-1 Sht 1 of 3	REV. E

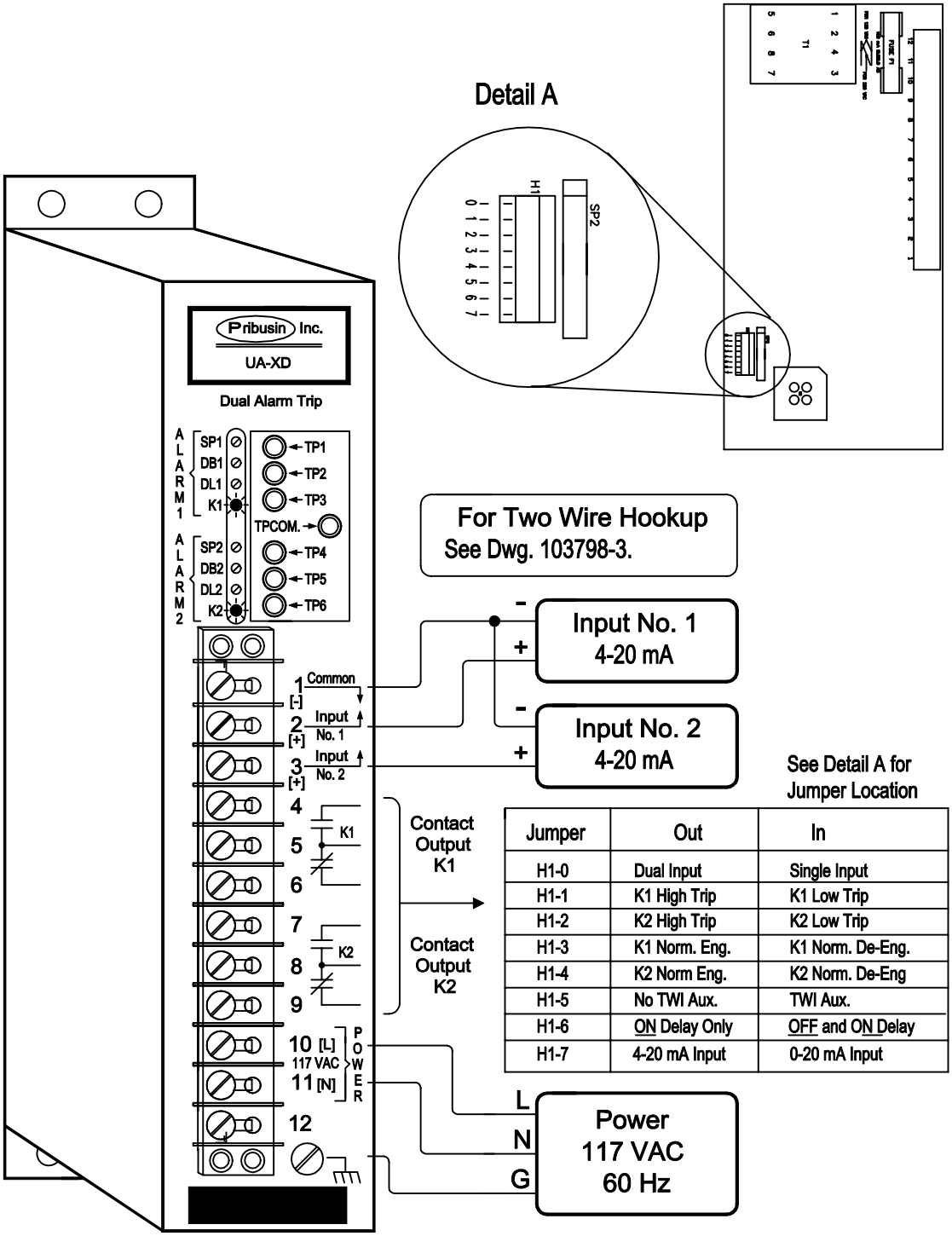

See Detail A for Jumper Location

Jumper	Out	In
H1-0	Dual Input	Single Input
H1-1	K1 High Trip	K1 Low Trip
H1-2	K2 High Trip	K2 Low Trip
H1-3	K1 Norm. Eng.	K1 Norm. De-Eng.
H1-4	K2 Norm Eng.	K2 Norm. De-Eng
H1-5	No TWI Aux.	TWI Aux.
H1-6	ON Delay Only	OFF and ON Delay
H1-7	4-20 mA Input	0-20 mA Input

Pribusin Inc. ©

CHKD:	DATE: MAR. 31/92	DRN: KS

Model: UA-XD
Dual Alarm Trip
Calibration/Connection

DWG. NO.: 103798-2 Sht 2 of 3	REV. D

For Two Wire Hookup Jumper on H2 should be on 24V position

Detail B

H2

+24V

COM.

See Detail A

Pribusin Inc.

UA-XD

Dual Alarm Trip

ALARM 1: SP1, DB1, DL1, K1

ALARM 2: SP2, DB2, DL2, K2

TP1, TP2, TP3, TPCOM., TP4, TP5, TP6

NOTE Reverse Polarity on Two Wire Hookup.

1 Common [-]

2 Input No. 1 [+]

3 Input No. 2 [+]

4, 5, 6 K1

7, 8, 9 K2

Contact Output K1

Contact Output K2

10 [L] 117 VAC

11 [N]

POWER

12

+ Two Wire Instrument 1 -

+ Two Wire Instrument 2 -

L N G

Power 117 VAC 60 Hz

See Detail A for Jumper Location

Jumper	Out	In
H1-0	Dual Input	Single Input
H1-1	K1 High Trip	K1 Low Trip
H1-2	K2 High Trip	K2 Low Trip
H1-3	K1 Norm. Eng.	K1 Norm. De-Eng.
H1-4	K2 Norm Eng.	K2 Norm. De-Eng
H1-5	No TWI Aux.	TWI Aux.
H1-6	ON Delay Only	OFF and ON Delay
H1-7	4-20 mA Input	0-20 mA Input

H1

0 1 2 3 4 5 6 7

SP2

Detail A

Two Wire Hookup

Pribusin Inc. ©

CHKD:	DATE: MAR. 31/92	DRN: KS

Model: UA-XD
Dual Alarm Trip
Calibration/Connection

DWG. NO.: 103798-3 Sht 3 of 3	REV. D