Pribusin Inc.

Manufacturers of Process Controls and Instrumentation

Model: NTC-XX-HLS

Non-Isolated High/Low Selector

NRTL/C

Standard Features:

DIN-Rail Mount (small size)

Industry Standard Input: 4-20 mA, 1-5 VDC, more (see back)

Industry Standard Output: 4-20 mA, 1-5 VDC, more (see back)

2 to 4 Inputs can be easily field configured for High or Low Input Selection

Microprocessor Controlled for High Accuracy and Flexibility

Easy Field Calibration (Typ. calibration time < 2 min. using handheld meter only)

Two Wire Supply for Two Wire Transmitters

Power: 24 VDC

High Noise Rejection

CSA and NRTL Approved

Function:

The NTC-XX-HLS is a microprocessor controlled High/Low selector. It is easily field configurable to up to 4 inputs. The unit can be set as a High selector in which case the output will read the highest of all active inputs. If set as a Low selector, the output will read the lowest of all active inputs.

This flexibility combined with easy field calibration allows for the fine tuning of a process on site with little effort. All that is required to change the calibration settings is a voltmeter and a small screwdriver.

Calibration:

All Calibration is done via multi-turn potentiometers. Each potentiometer has a test point associated with it. The test point shows a voltage of 0-5 VDC representing 0-100% of the parameter setting on the potentiometer. This makes for very easy field adjustment even with the instrument under power and running.

Specifications:

Accuracy/Linearity:+/- 0.3% max., +/- 0.1% typ.
Operating Temperature: -40 Deg.C. to +50 Deg.C.
Temperature Effects: +/-0.5% max., +/-0.2% typ.
(for 40 Deg.C. change)

NTC-XX-HLS

Dimensions:

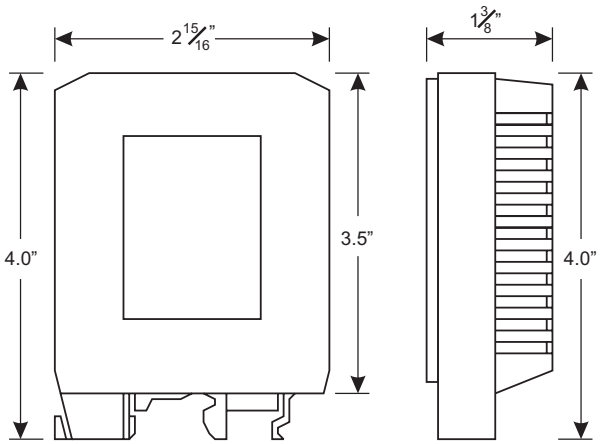

Calibration:

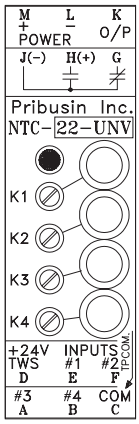

Calibration is made easy by multi turn potentiometers with test jacks for meter connection.

Connection:

Shown here for 4-20mA Output

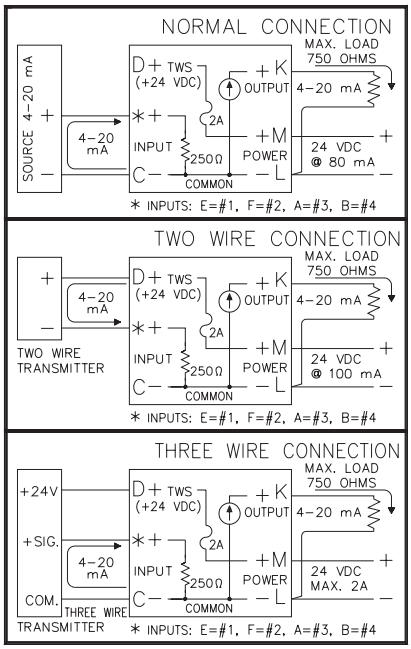

Model Designation:

NTC-X X-HLS

Input	Output
1: 1-5 mA (Zin=1K Ohm) 2: 4-20 mA(Zin=250 Ohm) 3: 0-1mA (Zin=5K Ohm) 4: 10-50 mA (Zin=100 Ohm) 5: 1-5 VDC (Zin=1Meg Ohm) 6: 0-10 VDC (Zin=1Meg Ohm) 7: Special Input	1: 1-5 mA (3000 Ohm Drive) 2: 4-20 mA (750 Ohm Drive) 3: 0-1 mA (15000 Ohm Drive) 4: 10-50 mA (250 Ohm Drive) 5: 1-5 VDC (Zout=250 Ohm) 6: 0-10 VDC (Zout=500 Ohm) 7: Special Output 8: Pulse Output 9: Frequency Output

Options:

(Add letters to end of Model Number)

R - RS485 Serial Output

Manufactured By:

Pribusin Inc.

www.pribusin.com
info@pribusin.com

USA:
Pribusin Inc.
4319 E. Apple Ave.
Muskegon, MI 49442
Ph: (231) 788-2900
Fx: (231) 788-2929

CANADA:
Pribusin Inc.
101 Freshway Dr. Unit 57
Concord, Ontario, L4K 1R9
Ph: (905) 660-5336
Fx: (905) 660-4068

Rev.A Subject to change without notice